Product Description: Tractor
Model Number: TR4200
Body Number: 1000061001S01
Version: A
Issue Date: 2024/9/3

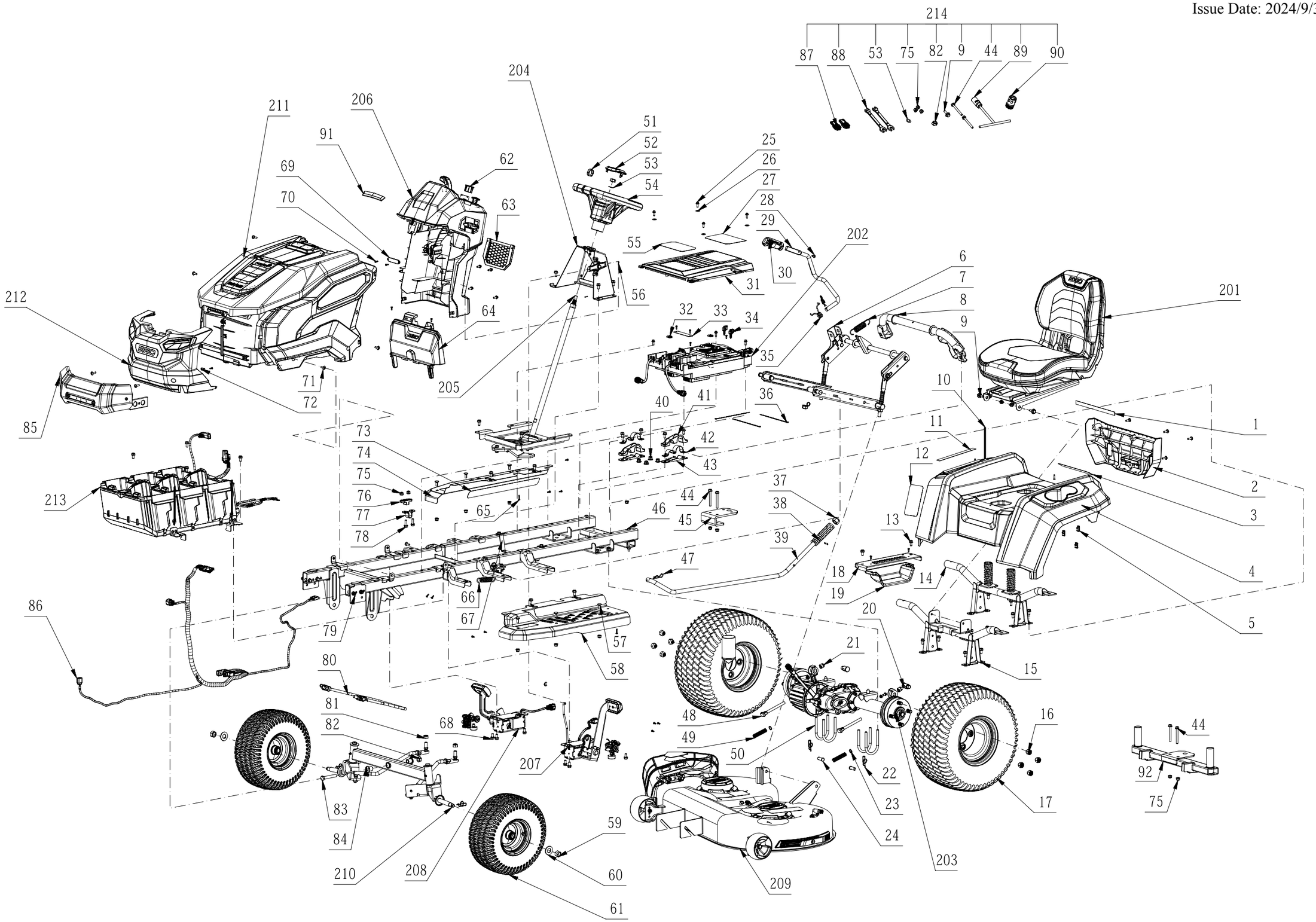

Product Description: Tractor
Model Number: TR4200
Body Number: 1000061001S01
Version: A
Issue Date: 2024/9/3

201 Seat Assembly

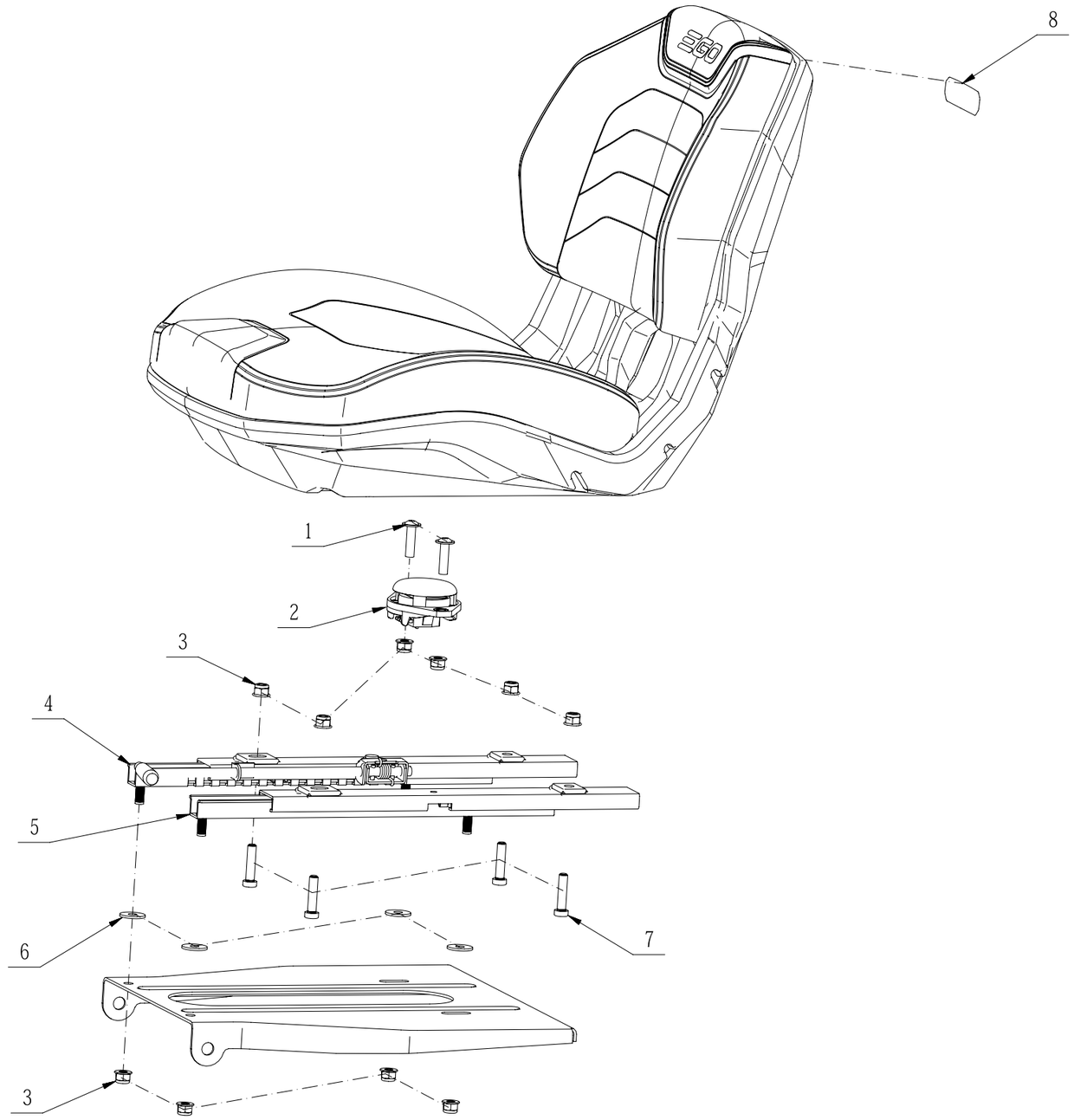

Product Description: Tractor
Model Number: TR4200
Body Number: 1000061001S01
Version: A
Issue Date: 2024/9/3

202 Control Electric Assembly

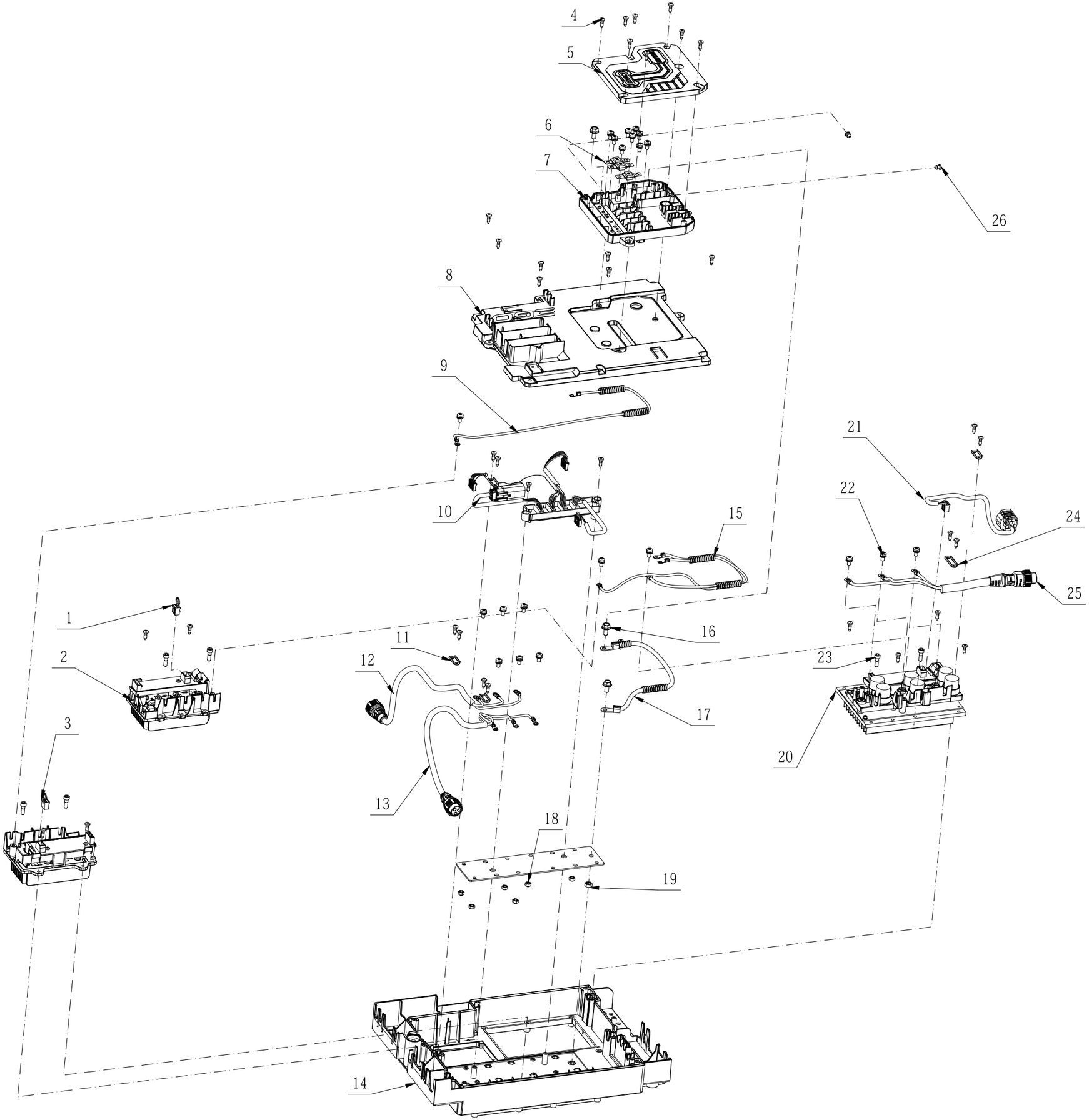

Product Description: Tractor
Model Number: TR4200
Body Number: 1000061001S01
Version: A
Issue Date: 2024/9/3

203 Drive Axle Assembly

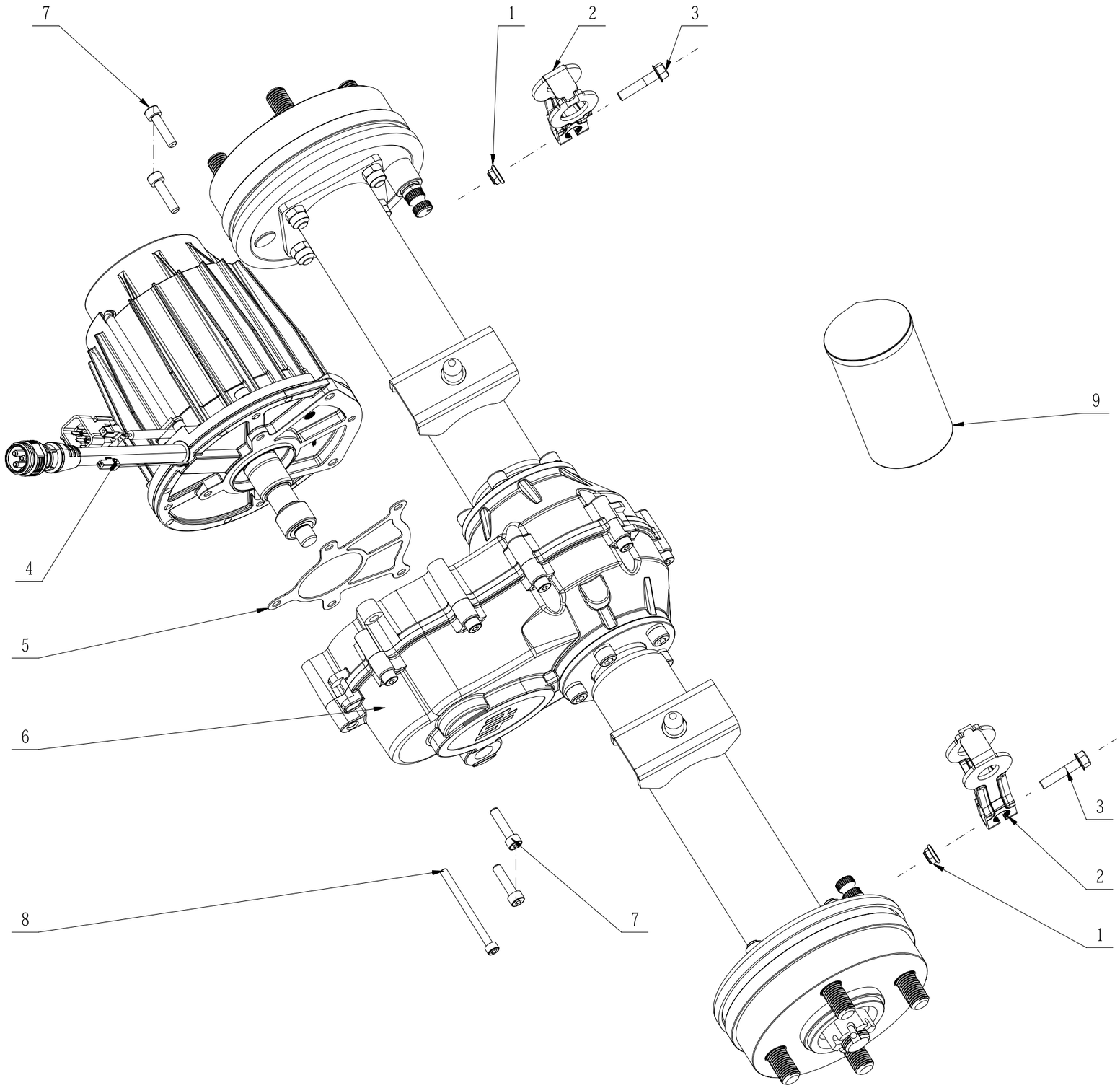

Product Description: Tractor
Model Number: TR4200
Body Number: 1000061001S01
Version: A
Issue Date: 2024/9/3

204 Support Plate Assembly

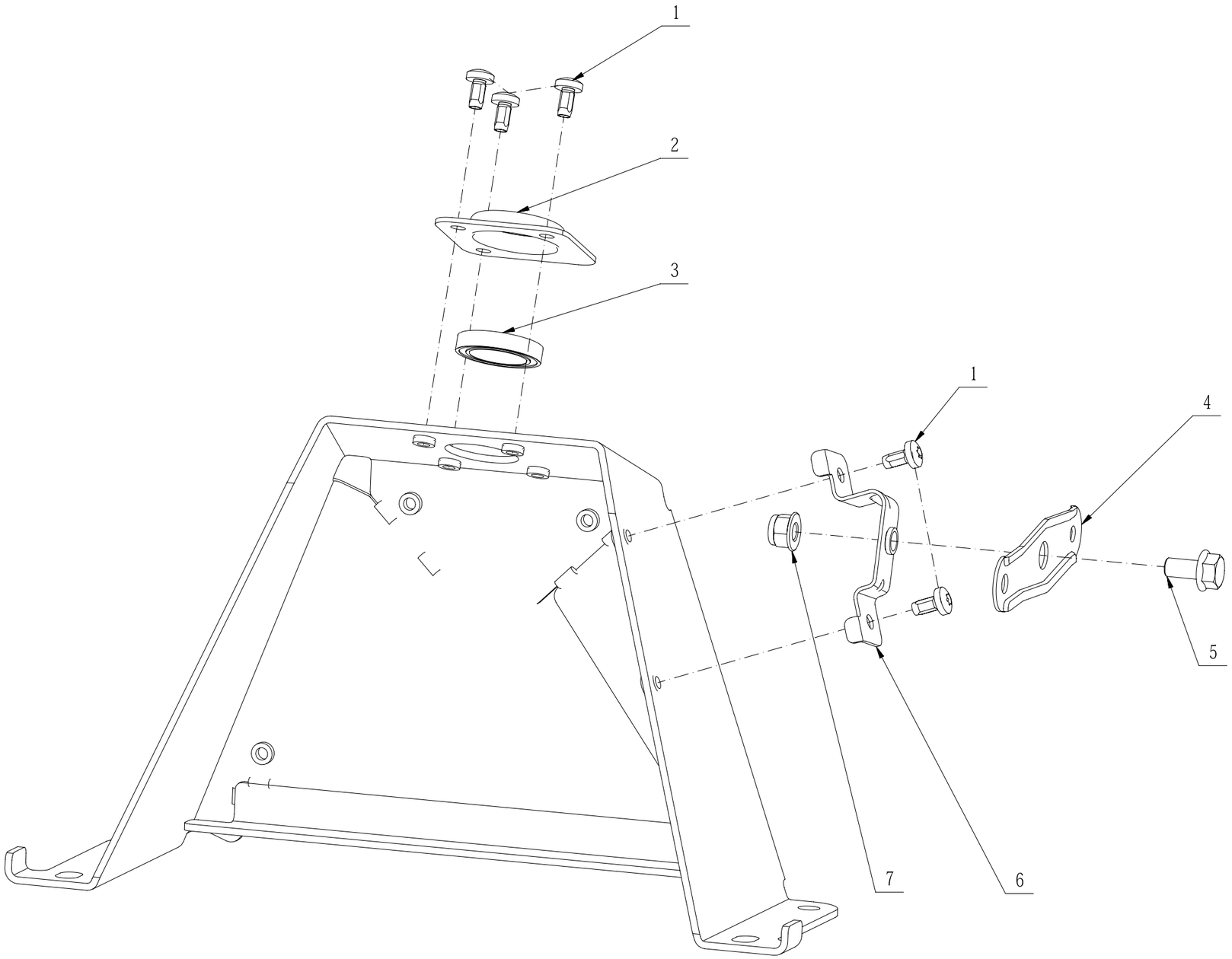

Product Description: Tractor
Model Number: TR4200
Body Number: 1000061001S01
Version: A
Issue Date: 2024/9/3

205 Spindle Assembly

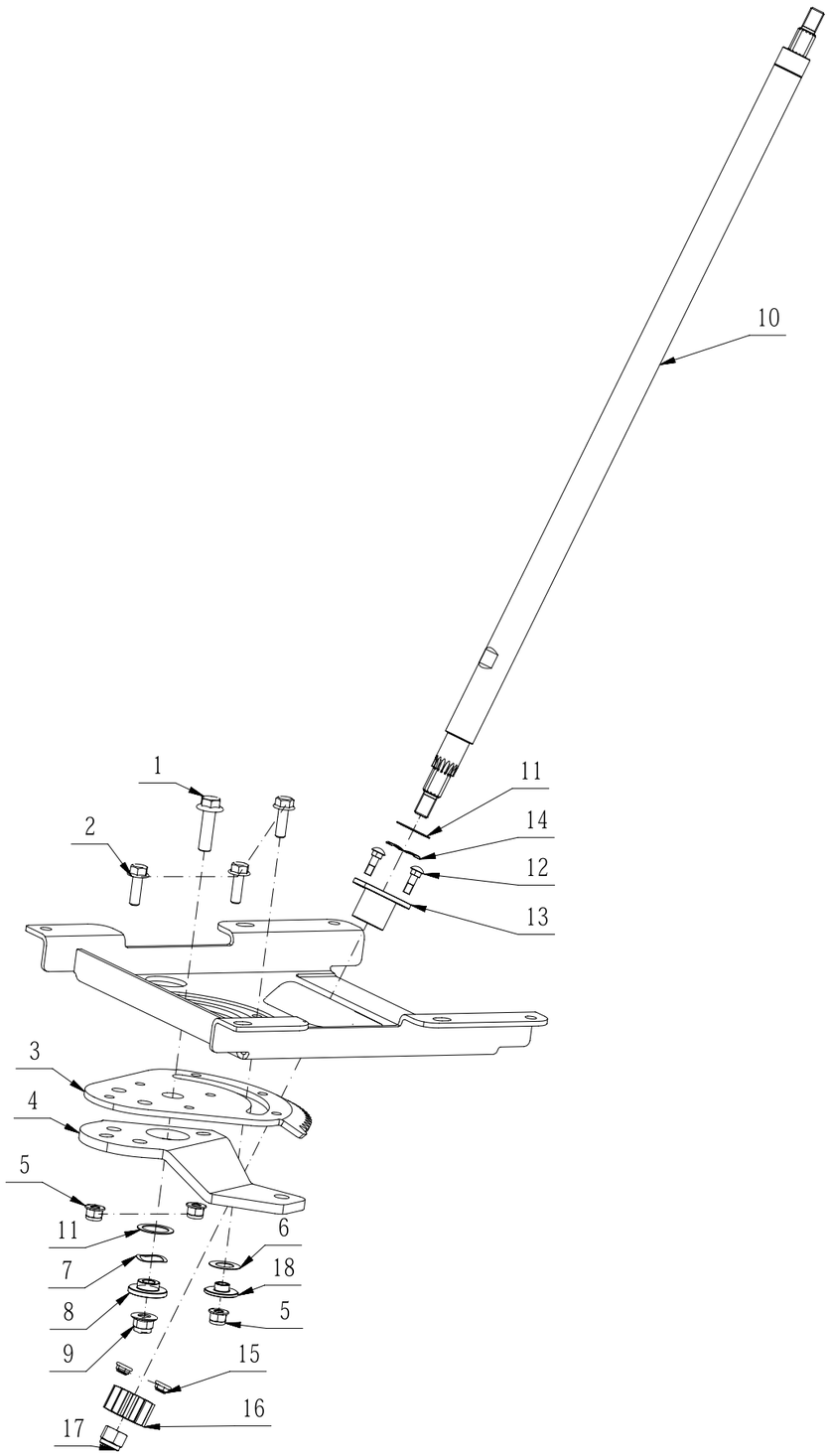

Product Description: Tractor
Model Number: TR4200
Body Number: 1000061001S01
Version: A
Issue Date: 2024/9/3

206 Manual Panel Assembly

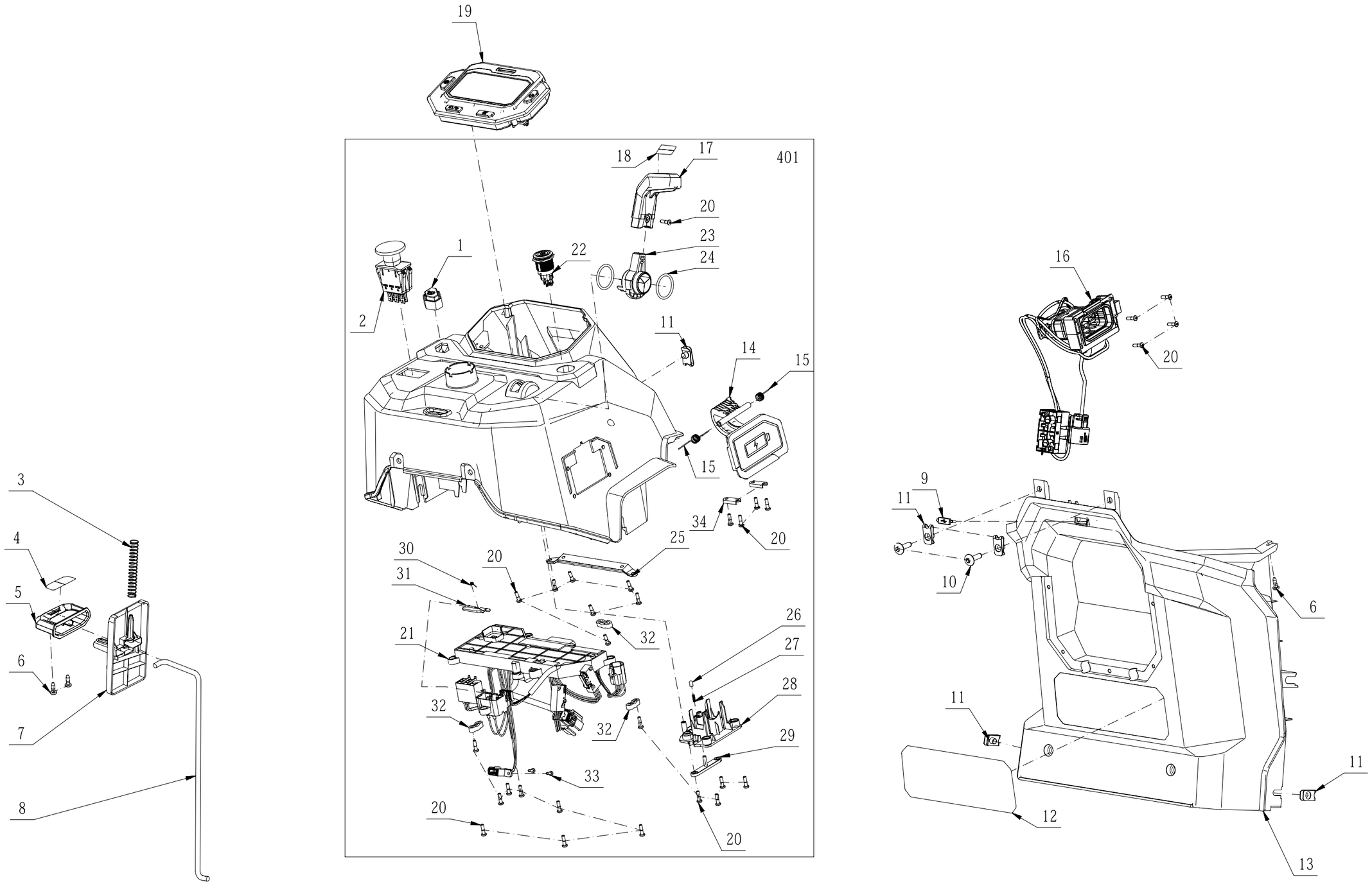

Product Description: Tractor
Model Number: TR4200
Body Number: 1000061001S01
Version: A
Issue Date: 2024/9/3

207 Brake Assembly

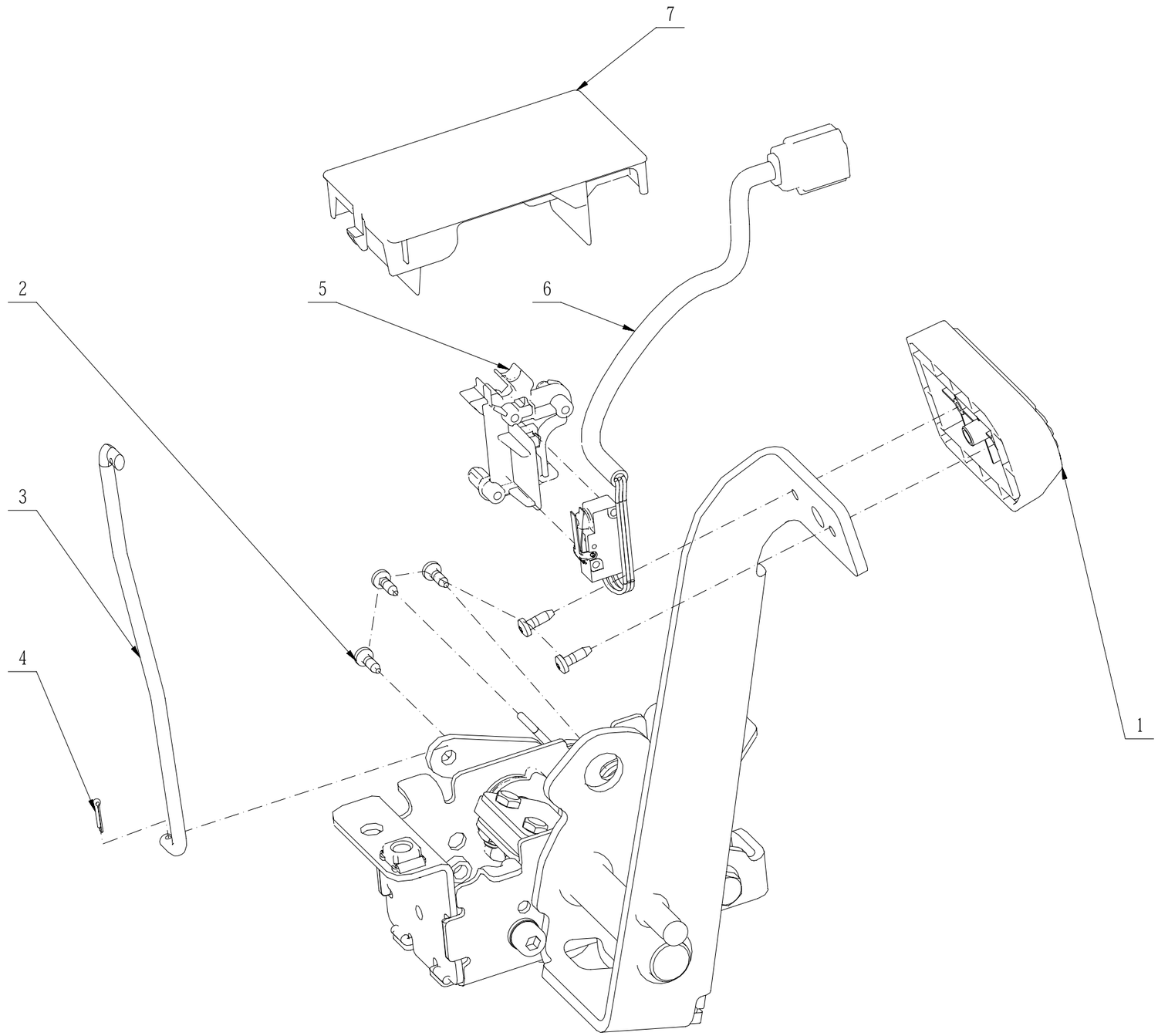

Product Description: Tractor
Model Number: TR4200
Body Number: 1000061001S01
Version: A
Issue Date: 2024/9/3

208 Accelerator

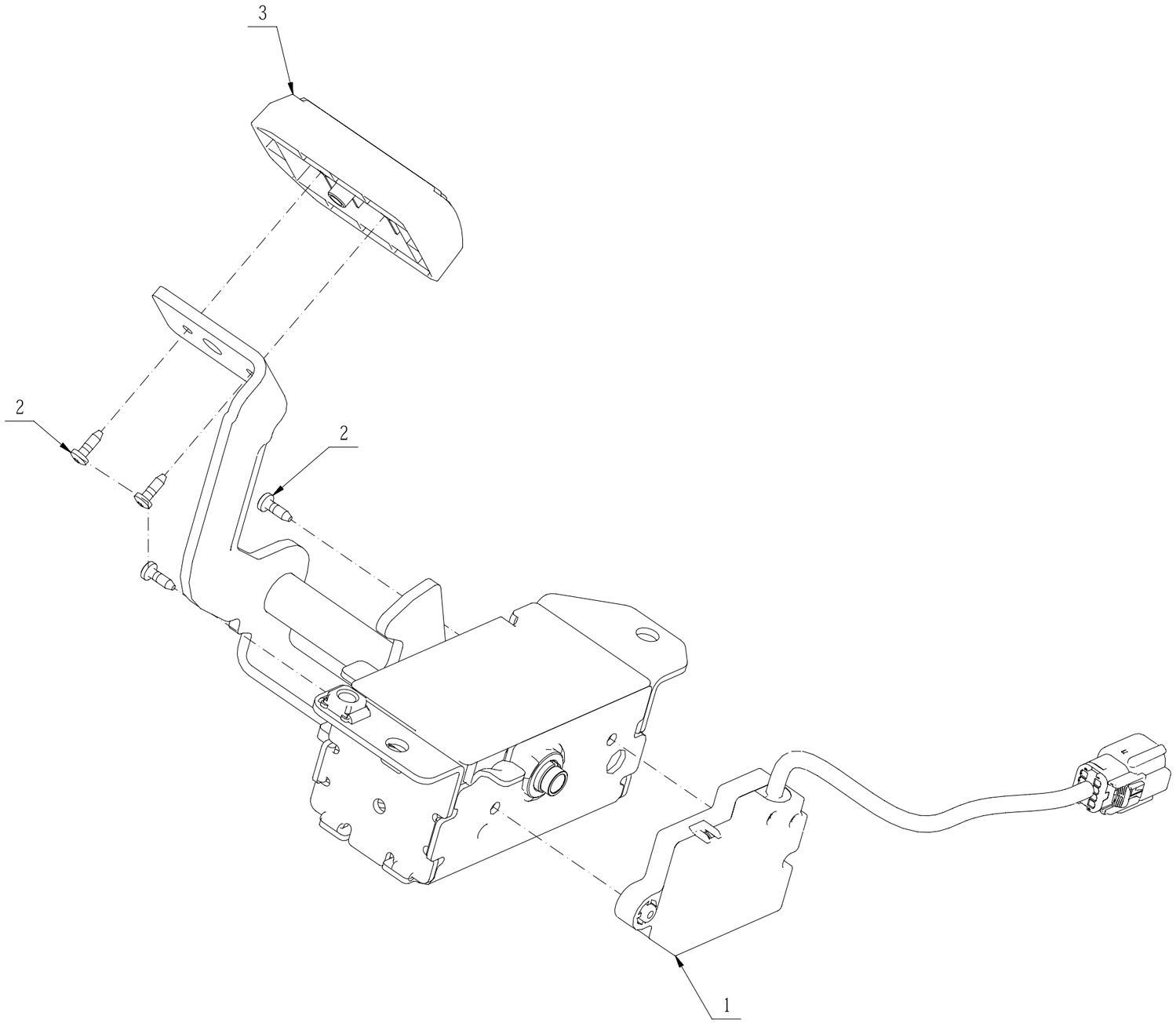

Product Description: Tractor
Model Number: TR4200
Body Number: 1000061001S01
Version: A
Issue Date: 2024/9/3

209 Deck Unit

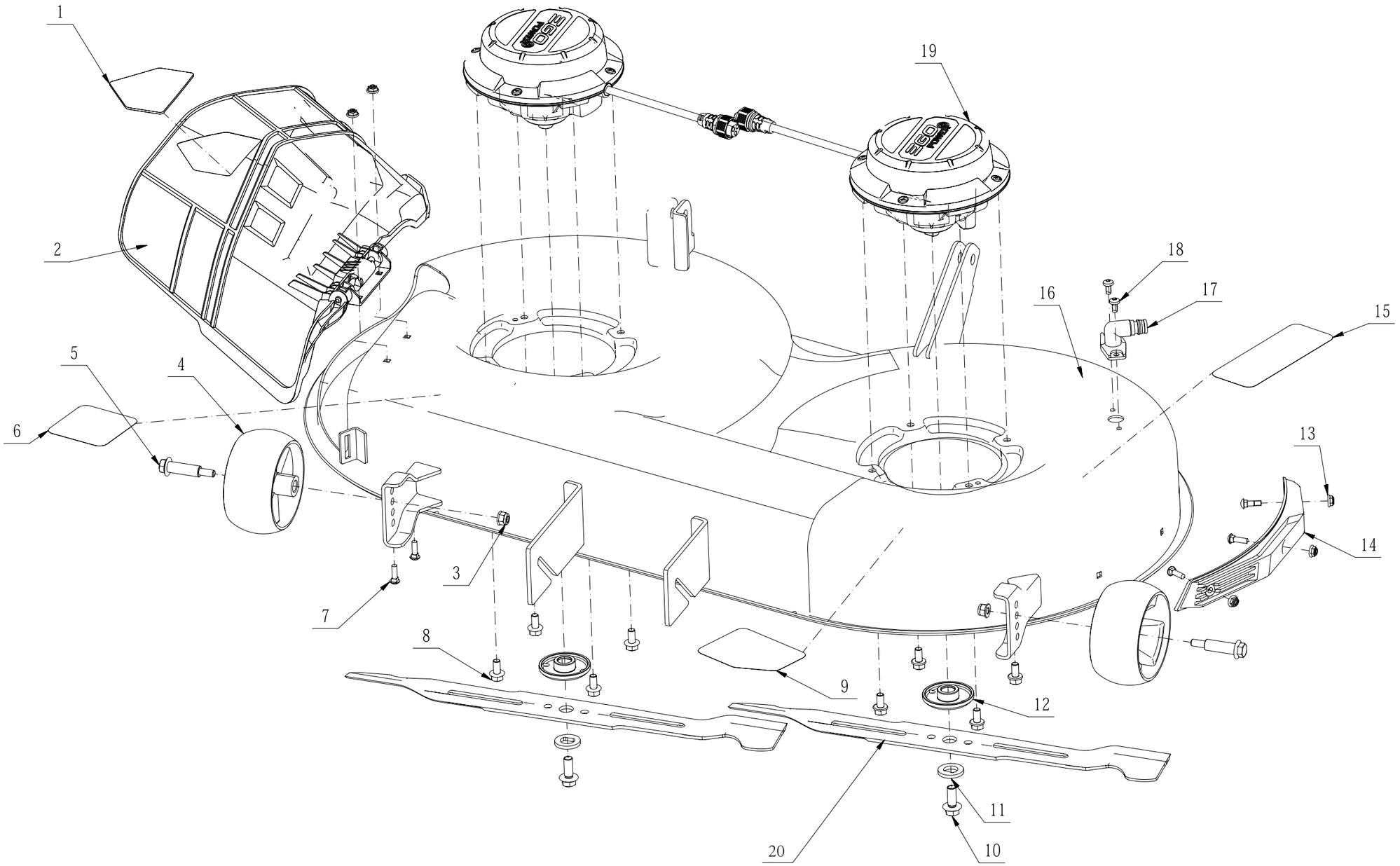

Product Description: Tractor
Model Number: TR4200
Body Number: 1000061001S01
Version: A
Issue Date: 2024/9/3

210 Front Axle

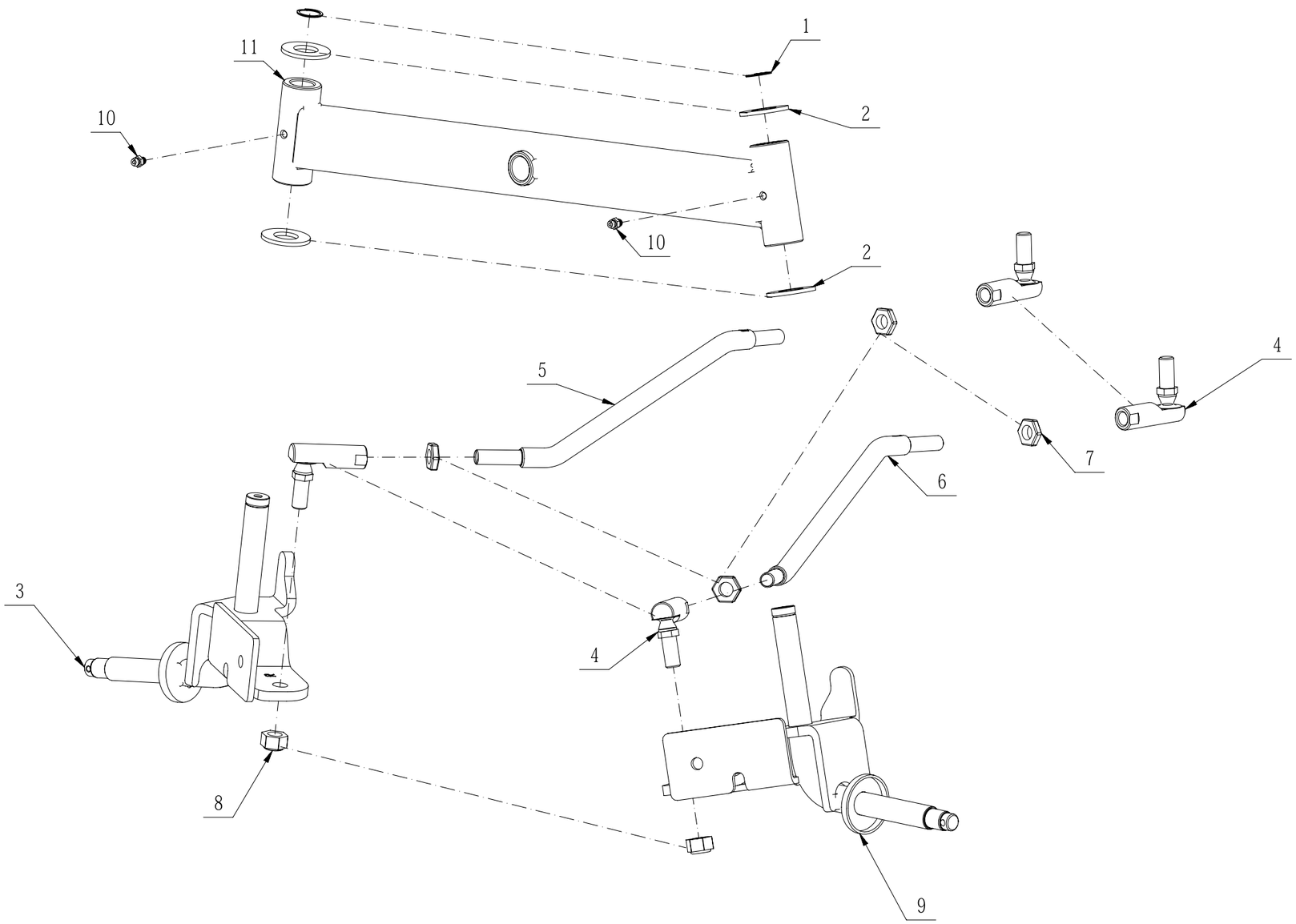

Product Description: Tractor
Model Number: TR4200
Body Number: 1000061001S01
Version: A
Issue Date: 2024/9/3

211 Protective Cover Assembly

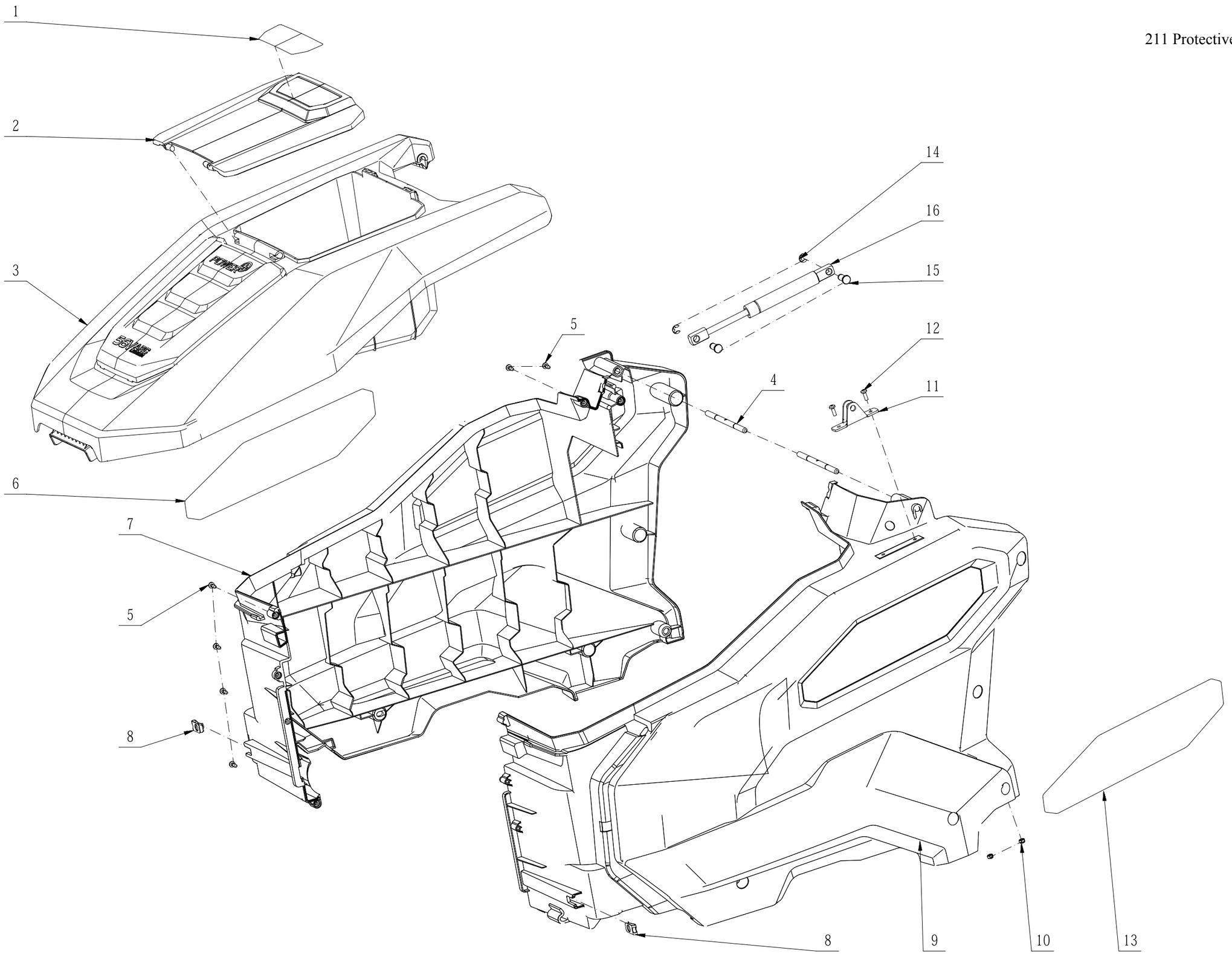

Product Description: Tractor
Model Number: TR4200
Body Number: 1000061001S01
Version: A
Issue Date: 2024/9/3

212 Front Cover Assembly

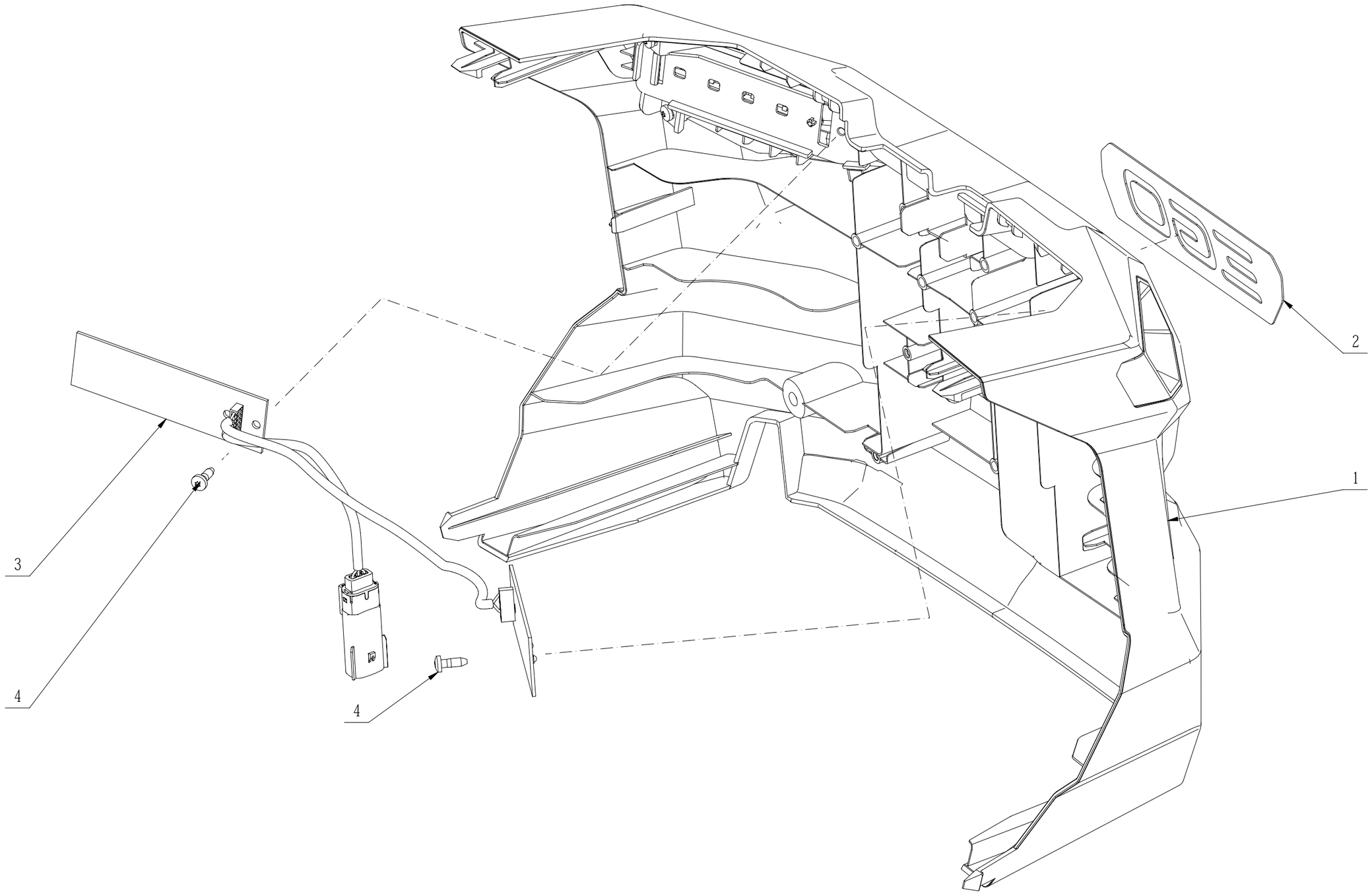

Service Part List_TR4200_Version A

| No. | Product Model# | Part Number | Description | Qty |
|---|---|---|---|---|
| 1 | TR4200 | 2246076001 | Nameplate | 1 |
| 2 | TR4200 | 3134261002 | Rear Guard | 1 |
| 3 | TR4200 | 2246019001 | Nameplate | 1 |
| 4 | TR4200 | 2850177002 | Rear Cover Assembly | 1 |
| 5 | TR4200 | 5630507001 | Anti-stripping Clip | 3 |
| 6 | TR4200 | 2850182001 | Lift Shaft Assembly | 1 |
| 7 | TR4200 | 3667856001 | Tension Spring | 1 |
| 8 | TR4200 | 2829438001 | Rocker Assembly | 1 |
| 9 | TR4200 | 5640510001 | Hexagon Flange Head Screw with Shoulder | 3 |
| 10 | TR4200 | 2491144001 | Nylon String | 3 |
| 11 | TR4200 | 2246023001 | Nameplate | 1 |
| 12 | TR4200 | 2246086001 | Nameplate | 1 |
| 13 | TR4200 | 5640360001 | Hexagon Flange Head Thread Forming Screw | 35 |
| 14 | TR4200 | 2829621001 | Base Assembly | 1 |
| 15 | TR4200 | 2829349001 | Base Assembly | 1 |
| 16 | TR4200 | 5630516001 | Conical Nut | 8 |
| 17 | TR4200 | 2829492001 | Rear Wheel Set | 2 |
| 18 | TR4200 | 3708913001 | Depth Stop Plate | 1 |
| 19 | TR4200 | 3134839001 | Splash Guard | 1 |
| 20 | TR4200 | 3555993001 | Spindle | 2 |
| 21 | TR4200 | 5630505001 | Hex Nut | 2 |
| 22 | TR4200 | 5670561002 | Split Pin | 7 |
| 23 | TR4200 | 5650178001 | Washer | 2 |
| 24 | TR4200 | 5670553001 | Pin Shaft | 2 |
| 25 | TR4200 | 5611051001 | Hexagon Flange Head Thread Forming Screw | 12 |
| 26 | TR4200 | 5650017011 | Plain Washer | 4 |
| 27 | TR4200 | 2246024001 | Nameplate | 1 |
| 28 | TR4200 | 5610388001 | Hexalobular Socket Thread Forming Screw | 1 |
| 29 | TR4200 | 3708920001 | Handle Lever | 1 |
| 30 | TR4200 | 3134257001 | Adjusting Handle | 1 |
| 31 | TR4200 | 2829635002 | Cover Assembly | 1 |
| 32 | TR4200 | 3135103001 | Fixed Unit | 3 |
| 33 | TR4200 | 3708979001 | Close Cover | 1 |
| 34 | TR4200 | 3131157001 | Wire Holder | 2 |
| 35 | TR4200 | 3667857001 | Torsion Spring | 1 |
| 36 | TR4200 | 2490023001 | Bundle | 3 |
| 37 | TR4200 | 5630511001 | Nut | 1 |
| 38 | TR4200 | 3667865001 | Compression Spring | 1 |
| 39 | TR4200 | 2829443001 | Connecting Rod Assembly | 1 |
| 40 | TR4200 | 5630267001 | Nut | 8 |
| 41 | TR4200 | 3134126001 | Fixed Unit | 2 |
| 42 | TR4200 | 3708866001 | Pressure Plate | 2 |
| 43 | TR4200 | 3134127001 | Bottom Board | 2 |
| 44 | TR4200 | 5640363002 | Flange Bolt-Large Series | 4 |
| 45 | TR4200 | 3708924001 | Hitch | 1 |
| 46 | TR4200 | 5640302001 | Hexagon Head Bolt | 2 |
| 47 | TR4200 | 5670753001 | Spring Pin | 1 |
| 48 | TR4200 | 5640507001 | Bolts for T-Slot | 2 |

| | | | | |
|---|---|---|---|---|
| 49 | TR4200 | 3667850001 | Compression Spring | 2 |
| 50 | TR4200 | 5640530001 | U Bolt | 4 |
| 51 | TR4200 | 3134267001 | Decorative Ring | 1 |
| 52 | TR4200 | 3323511001 | Decorative Cover | 1 |
| 53 | TR4200 | 5650703001 | Plain Washer | 2 |
| 54 | TR4200 | 3403459001 | Steering Wheel Assembly | 1 |
| 55 | TR4200 | 2246022001 | Nameplate | 1 |
| 56 | TR4200 | 5670184002 | Pin | 2 |
| 57 | TR4200 | 5640358001 | Small Round Head Low Square Neck Bolt | 6 |
| 58 | TR4200 | 3708859002 | Pedal | 1 |
| 59 | TR4200 | 5630518001 | Lock Nut | 2 |
| 60 | TR4200 | 5650908001 | Plain Washer | 2 |
| 61 | TR4200 | 2829678001 | Front Wheel Set | 2 |
| 62 | TR4200 | 3134435001 | Bushing | 1 |
| 63 | TR4200 | 2850266001 | Protecting Net Assembly | 1 |
| 64 | TR4200 | 3134552001 | Decorative Cover | 1 |
| 65 | TR4200 | 5620157006 | Hexagon Socket Screw | 4 |
| 66 | TR4200 | 3667946001 | Tension Spring | 1 |
| 67 | TR4200 | 3708947001 | Bracket | 1 |
| 68 | TR4200 | 5640222001 | Hexagon Flange Bolt | 2 |
| 69 | TR4200 | 3134123001 | Locking Plate | 1 |
| 70 | TR4200 | 5620377003 | Hexagon Socket Screw | 21 |
| 71 | TR4200 | 5611130001 | Hexalobular Socket Tapping Screw | 11 |
| 72 | TR4200 | 3700367001 | Cord Anchorage | 1 |
| 73 | TR4200 | 2245524001 | Nameplate | 2 |
| 74 | TR4200 | 3708858002 | Pedal | 1 |
| 75 | TR4200 | 5630371001 | Prevailing Torque Type Hexagon Lock Nut with Flange | 23 |
| 76 | TR4200 | 3521236001 | Support Base | 2 |
| 77 | TR4200 | 3707307001 | Pressure Plate | 2 |
| 78 | TR4200 | 5640354001 | Flange Bolt-Large Series | 4 |
| 79 | TR4200 | 5640353001 | Flange Bolt-Large Series | 4 |
| 80 | TR4200 | 2850152001 | Hanger Rod Assembly | 1 |
| 81 | TR4200 | 5630519001 | Lock Nut | 2 |
| 82 | TR4200 | 5630070003 | Nut | 3 |
| 83 | TR4200 | 5640521001 | Hexagon Head Bolt | 1 |
| 84 | TR4200 | 3580470001 | Bushing | 3 |
| 85 | TR4200 | 2850198001 | Front Frame Assembly | 1 |
| 86 | TR4200 | 4861221001 | Bus Wire Harness Assembly | 1 |
| 87 | TR4200 | 2827673001 | Key Assembly | 2 |
| 88 | TR4200 | 5680369001 | Open-end Wrench | 2 |
| 89 | TR4200 | 5680368001 | Socket Wrench | 1 |
| 90 | TR4200 | 2823689001 | Quick Connect Coupling | 1 |
| 91 | TR4200 | 3135765001 | Screw Cover | 1 |
| 92 | TR4200 | 2829516001 | Support Assembly | 1 |
| 201 | TR4200 | 2829546002 | Seat Assembly | 1 |
| 202 | TR4200 | 2832127001 | Control Electric Assembly | 1 |
| 207 | TR4200 | 2829440001 | Brake Assembly | 1 |
| 208 | TR4200 | 2829441001 | Accelerator | 1 |
| 213 | TR4200 | 2850207001 | Battery Box Assembly | 1 |
| 214 | TR4200 | 2851021001 | Wrench Tool Set | 1 |
| 201-1 | TR4200 | 5611121001 | Hexagon Socket Button Head Screw | 2 |
| 201-2 | TR4200 | 4870579001 | Switch Assembly | 1 |
| 201-3 | TR4200 | 5630371001 | Prevailing Torque Type Hexagon Lock Nut with Flange | 10 |

| | | | | |
|---|---|---|---|---|
| 201-4 | TR4200 | 2829523001 | Right Guide Rail | 1 |
| 201-5 | TR4200 | 2829522001 | Left Guide Rail | 1 |
| 201-6 | TR4200 | 5650024005 | Plain Washer | 12 |
| 201-7 | TR4200 | 5611175001 | Hexagon Socket Head Cap Screw | 4 |
| 201-8 | TR4200 | 2246018001 | Nameplate | 1 |
| 202-1 | TR4200 | 4861205001 | Motor Wiring Harness | 1 |
| 202-2 | TR4200 | 2831471001 | Motor Driver Electric Assembly | 2 |
| 202-3 | TR4200 | 4861204001 | Motor Wiring Harness | 1 |
| 202-4 | TR4200 | 5620377003 | Hexagon Socket Screw | 40 |
| 202-5 | TR4200 | 3131053001 | Fuse PCB Box | 1 |
| 202-6 | TR4200 | 4970355001 | Fuse | 3 |
| 202-7 | TR4200 | 2850307001 | Base Assembly | 1 |
| 202-8 | TR4200 | 3134292001 | Close Cover | 1 |
| 202-9 | TR4200 | 4861235001 | Host Power Wire Harness | 1 |
| 202-10 | TR4200 | 2831467001 | Connecting Electric Assembly | 1 |
| 202-11 | TR4200 | 3700367001 | Cord Anchorage | 5 |
| 202-12 | TR4200 | 4860751001 | Motor Wire Harness | 1 |
| 202-13 | TR4200 | 4860751002 | Motor Wire Harness | 1 |
| 202-14 | TR4200 | 3134291001 | PCB Box | 1 |
| 202-15 | TR4200 | 4861210001 | Host Power Wire Harness | 1 |
| 202-16 | TR4200 | 5640373001 | Hexagon Head Bolt | 3 |
| 202-17 | TR4200 | 4860768001 | Host Power Wire Harness | 1 |
| 202-18 | TR4200 | 5630006003 | Prevailing Torque Hexagon Nut | 6 |
| 202-19 | TR4200 | 5630015001 | Prevailing Torque Hexagon Nut | 1 |
| 202-20 | TR4200 | 2831470001 | Main Electric Assembly | 1 |
| 202-21 | TR4200 | 4861364001 | Wire Harness | 1 |
| 202-22 | TR4200 | 5611128001 | Screw and Washer Assembly | 21 |
| 202-23 | TR4200 | 5620019004 | Hexagon Socket Screw | 6 |
| 202-24 | TR4200 | 3707407001 | Cord Anchorage | 1 |
| 202-25 | TR4200 | 4861234001 | Motor Wire Harness | 1 |
| 202-26 | TR4200 | 3133018001 | Waterproof Plug | 2 |
| 203-1 | TR4200 | 5630244004 | Nut | 2 |
| 203-2 | TR4200 | 3708883001 | Rocker Arm | 2 |
| 203-3 | TR4200 | 5640536001 | Flange Bolt | 2 |
| 203-4 | TR4200 | 2730382001 | DC Motor | 1 |
| 203-5 | TR4200 | 5690612001 | Sealing Gasket | 1 |
| 203-6 | TR4200 | 2829675001 | Rear Axle Assembly | 1 |
| 203-7 | TR4200 | 5620550004 | Hexagon Socket Screw | 4 |
| 203-8 | TR4200 | 5611050001 | Hexagon Socket Screw | 1 |
| 203-9 | TR4200 | 5970163001 | Grease | 2 |
| 204-1 | TR4200 | 5610388001 | Hexalobular Socket Thread Forming Screw | 5 |
| 204-2 | TR4200 | 3708919001 | Bearing Clamping Plate | 1 |
| 204-3 | TR4200 | 5700252001 | Ball Bearing | 1 |
| 204-4 | TR4200 | 3708905001 | Switch-plate | 1 |
| 204-5 | TR4200 | 5640222001 | Hexagon Flange Bolt | 1 |
| 204-6 | TR4200 | 3708904001 | Supporting Structure | 1 |
| 204-7 | TR4200 | 5630371001 | Prevailing Torque Type Hexagon Lock Nut with Flange | 1 |
| 205-1 | TR4200 | 5640212002 | Bolt | 1 |
| 205-2 | TR4200 | 5640354001 | Flange Bolt-Large Series | 3 |
| 205-3 | TR4200 | 3708923001 | Deflecting Plate | 1 |
| 205-4 | TR4200 | 3708916001 | Connecting Plate | 1 |
| 205-5 | TR4200 | 5630371001 | Prevailing Torque Type Hexagon Lock Nut with Flange | 3 |
| 205-6 | TR4200 | 5650366001 | Washer | 1 |

| | | | | |
|---|---|---|---|---|
| 205-7 | TR4200 | 5650288001 | Wave washer | 1 |
| 205-8 | TR4200 | 3580471001 | Bushing | 1 |
| 205-9 | TR4200 | 5630267001 | Nut | 1 |
| 205-10 | TR4200 | 2850275001 | Shaft Assembly | 1 |
| 205-11 | TR4200 | 5650246001 | Washer | 2 |
| 205-12 | TR4200 | 5640357001 | Semicircular Head Square Neck Bolt | 2 |
| 205-13 | TR4200 | 3522133001 | Support Base | 1 |
| 205-14 | TR4200 | 5650305001 | Wave Washer | 1 |
| 205-15 | TR4200 | 5630244004 | Nut | 2 |
| 205-16 | TR4200 | 3570388001 | Spline Gear | 1 |
| 205-17 | TR4200 | 5630070003 | Nut | 1 |
| 205-18 | TR4200 | 3580472001 | Bushing | 1 |
| 206-1 | TR4200 | 3134190001 | Cruise Button | 1 |
| 206-2 | TR4200 | 4870762001 | Push Switch | 1 |
| 206-3 | TR4200 | 3667866001 | Compression Spring | 1 |
| 206-4 | TR4200 | 2246017001 | Nameplate | 1 |
| 206-5 | TR4200 | 3134137002 | Push Plate | 1 |
| 206-6 | TR4200 | 5620377003 | Hexagon Socket Screw | 4 |
| 206-7 | TR4200 | 3134138001 | Plunge Unit | 1 |
| 206-8 | TR4200 | 3650312001 | Pull Rod | 1 |
| 206-9 | TR4200 | 3135120001 | Rubber Plug | 1 |
| 206-10 | TR4200 | 5611130001 | Hexalobular Socket Tapping Screw | 2 |
| 206-11 | TR4200 | 5630507001 | Anti-stripping Clip | 4 |
| 206-12 | TR4200 | 2246021001 | Nameplate | 1 |
| 206-13 | TR4200 | 3134186001 | Support Base | 1 |
| 206-14 | TR4200 | 3134179001 | Charging Port Cover | 1 |
| 206-15 | TR4200 | 3660810001 | Torsion Spring | 2 |
| 206-16 | TR4200 | 2829750001 | Charging Harness Assembly | 1 |
| 206-17 | TR4200 | 3134192002 | Handle | 1 |
| 206-18 | TR4200 | 2246016001 | Nameplate | 1 |
| 206-19 | TR4200 | 2829495001 | LCD Assembly | 1 |
| 206-20 | TR4200 | 5610305001 | Tapping Screw | 29 |
| 206-21 | TR4200 | 2831466001 | Operation Panel Control Electric Assembly | 1 |
| 206-22 | TR4200 | 4870764001 | Push Switch | 1 |
| 206-23 | TR4200 | 3134193001 | Lower Handle | 1 |
| 206-24 | TR4200 | 5690362001 | O Ring | 2 |
| 206-25 | TR4200 | 3134188001 | Connecting Plate | 1 |
| 206-26 | TR4200 | 3700191001 | Cap | 1 |
| 206-27 | TR4200 | 3660274001 | Spring | 1 |
| 206-28 | TR4200 | 3134183001 | Pressure Plate | 1 |
| 206-29 | TR4200 | 3134331001 | Clapboard | 1 |
| 206-30 | TR4200 | 3660811001 | Torsion Spring | 1 |
| 206-31 | TR4200 | 3131079001 | Key Cover | 1 |
| 206-32 | TR4200 | 3122798001 | Cord Anchorage | 3 |
| 206-33 | TR4200 | 5610283001 | Tapping Screw | 2 |
| 206-34 | TR4200 | 3700367001 | Cord Anchorage | 2 |
| 206-401 | TR4200 | 2851019001 | Operation Panel Assembly | 1 |
| 207-1 | TR4200 | 3134128001 | Pedal | 1 |
| 207-2 | TR4200 | 5620377003 | Hexagon Socket Screw | 5 |
| 207-3 | TR4200 | 3650329001 | Handspike | 1 |
| 207-4 | TR4200 | 5670184002 | Pin | 1 |
| 207-5 | TR4200 | 3134130001 | Switch Support | 1 |
| 207-6 | TR4200 | 4870979001 | Switch Assembly | 1 |

| | | | | |
|---|---|---|---|---|
| 207-7 | TR4200 | 3135543001 | Upper Dust Cover | 1 |
| 208-1 | TR4200 | 2831378001 | Hall Electric Assembly | 1 |
| 208-2 | TR4200 | 5620377003 | Hexagon Socket Screw | 4 |
| 208-3 | TR4200 | 3134129001 | Pedal | 1 |
| 209-1 | TR4200 | 2243529014 | Nameplate | 1 |
| 209-2 | TR4200 | 2823670004 | Chute Deflector Assembly | 1 |
| 209-3 | TR4200 | 5630371001 | Prevailing Torque Type Hexagon Lock Nut with Flange | 2 |
| 209-4 | TR4200 | 3131072001 | Roller Wheel | 2 |
| 209-5 | TR4200 | 5640352001 | Hexagon Flange Bolt | 2 |
| 209-6 | TR4200 | 2246085001 | Nameplate | 1 |
| 209-7 | TR4200 | 5640357001 | Semicircular Head Square Neck Bolt | 5 |
| 209-8 | TR4200 | 5640222001 | Hexagon Flange Bolt | 8 |
| 209-9 | TR4200 | 2246027001 | Nameplate | 1 |
| 209-10 | TR4200 | 5640226001 | Flange Bolt | 2 |
| 209-11 | TR4200 | 5650510001 | Washer | 2 |
| 209-12 | TR4200 | 3580113001 | Flange | 2 |
| 209-13 | TR4200 | 5630244004 | Nut | 5 |
| 209-14 | TR4200 | 3131048001 | Baffle Strip | 1 |
| 209-15 | TR4200 | 2244796001 | Nameplate | 1 |
| 209-16 | TR4200 | 2829476002 | Deck Unit | 1 |
| 209-17 | TR4200 | 2823718001 | Outlet Nozzle Assembly | 1 |
| 209-18 | TR4200 | 5610388001 | Hexalobular Socket Thread Forming Screw | 1 |
| 209-19 | TR4200 | 2730319001 | DC Motor | 2 |
| 209-20 | TR4200 | 3707399001 | Blade | 2 |
| 210-1 | TR4200 | 5660384001 | Spiral Ring For Shaft | 2 |
| 210-2 | TR4200 | 5650908001 | Plain Washer | 4 |
| 210-3 | TR4200 | 2829425001 | Front Wheel Bracket Assembly | 1 |
| 210-4 | TR4200 | 5700539001 | Spherical Plain Bearings | 4 |
| 210-5 | TR4200 | 3708922001 | Right Drag Link | 1 |
| 210-6 | TR4200 | 3708921001 | Left Drag Link | 1 |
| 210-7 | TR4200 | 5630520001 | Hexagon Thin Nut | 4 |
| 210-8 | TR4200 | 5630519001 | Lock Nut | 2 |
| 210-9 | TR4200 | 2829424001 | Front Wheel Bracket Assembly | 1 |
| 210-10 | TR4200 | 5640520001 | Straight Hydraullc Grease Nipples | 2 |
| 210-11 | TR4200 | 2829423001 | Front Axle | 1 |
| 211-1 | TR4200 | 2246015001 | Nameplate | 1 |
| 211-2 | TR4200 | 3403493002 | Lid Case | 1 |
| 211-3 | TR4200 | 2850158002 | Battery Box Cover Assembly | 1 |
| 211-4 | TR4200 | 5670564001 | Pin Shaft | 2 |
| 211-5 | TR4200 | 5620377003 | Hexagon Socket Screw | 6 |
| 211-6 | TR4200 | 2246020002 | Nameplate | 1 |
| 211-7 | TR4200 | 3134185002 | Right Cover | 1 |
| 211-8 | TR4200 | 5630507001 | Anti-stripping Clip | 2 |
| 211-9 | TR4200 | 3134178002 | Left Cover | 1 |
| 211-10 | TR4200 | 5630231001 | Nut | 2 |
| 211-11 | TR4200 | 3707349001 | Support Base | 2 |
| 211-12 | TR4200 | 5620477003 | Hexagon Lobular Screw | 2 |
| 211-13 | TR4200 | 2246020001 | Nameplate | 1 |
| 211-14 | TR4200 | 5660305001 | E Ring | 2 |
| 211-15 | TR4200 | 5670559001 | Pin Shaft | 2 |
| 211-16 | TR4200 | 3660805001 | Gas Spring | 1 |
| 212-1 | TR4200 | 2850240002 | Front Cover Assembly | 1 |
| 212-2 | TR4200 | 3707446001 | EGO Logo | 1 |

| | | | | |
|---|---|---|---|---|
| 212-3 | TR4200 | 2831479001 | LED Electric Assembly | 1 |
| 212-4 | TR4200 | 5620377003 | Hexagon Socket Screw | 2 |